Installation Instructions

NMEA 2000 Navsensor

V1.1 08/2016

AMZ
YACHTING

Contents

Preliminary Remarks	4
Safety Instructions for Installation	4
Safety Instructions for Maintenance	6
The VDO Navsensor	7
Components	7
Functions	7
The NMEA Interface	8
Installation of the VDO Navsensor	10
Flat mount installation	11
Pole mount installation	13
Calibration	14
Diagnostic Indication	17
Hardware Specification	18
Technical Data	19
Accessories	21

AMZ YACHTING

VDO Navsensor

Preliminary Remarks

In purchasing a sensor from the VDO marine range you have decided on a high value product, which has been manufactured according to acknowledged technical standards. Modern production processes and compliance with currently applicable quality assurance standards guarantee that our products leave the factory in perfect condition.
We thank you for making a good choice, and we are convinced that this instrument will be reliable and of great help to you and keep you safe at sea.

In order to ensure easy and safe handling of your VDO sensor, you should familiarize yourself with all the features and functions.
Please take the time to read these instructions carefully and completely.

Safety Instructions for Installation

This product has been developed, manufactured and tested in accordance with the requirements of EC, UL and FCC directives and the acknowledged state of the art.

Please follow all the instructions given in this handbook exactly.

Please pay attention to all text passages labeled with this symbol. These are very important hints for operating and security of the instruments.

AMZ YACHTING

Before beginning work the native terminal of the battery should be disconnected.

Use of information provided by the VDO Navsensor does not release you from the responsibility over your ship and demands good seamanship. Always use your nautical experience in interpreting the displayed values.

If you carry out this work yourself, wear suitable working clothes. Do not wear wide fitting clothes. If you have long hair, wear a hair-net. Clothes and hair can get caught in moving and rotating parts.

Wearing of metallic or conductive jewellery, such as necklaces, bracelets, rings etc. is not allowed when working on the electrical installation on board.

Please note that with disconnection of the battery, all volatile electronic memories lose their input values and must be reprogrammed.

Explosion hazard! Before beginning work on the engine compartment of petrol engines, switch on the ventilator of the engine compartment.

Ensure that necessary clearance is provided behind the cable opening, at the position where the sensor is to be installed.

When selecting the installation position for the sensor, take care that no stringers are drilled. Be careful also of furniture, floorboards, superstructure boxes, cables etc.

When carrying out installation work with a sealing compound, solvent vapours can be formed. Make sure of adequate ventilation and follow the instructions for use of the sealing compound manufacturer.

For the installation only use VDO or NMEA approved cables.

If you don't use standard cables, the wires used should be adequately insulated or should have sufficient electrical strength, and the contact point should be protected against electrical shock hazard. The electrical conducting components of the connected consuming devices should also be protected against direct contact through suitable measures. Installation of bare metallic wires and contacts is not allowed.

Take account of the wire cross section. A reduction of the wire cross section results in a higher current density. This can cause the wire to heat up and potentially catch fire.
Connect the wires only in accordance to the wiring diagram.

Safety Instructions for Maintenance

The sensor display unit is maintenance-free. Do not use cleaning agents.
Repairs on the sensor should be carried out only by VDO authorized specialists

AMZ YACHTING

The VDO Navsensor

The multifunctional VDO Navsensor is the gem of all sensors. The inertial sensor complements the inbuilt satellite receiver module (GPS) to provide accurate readings of the speed of travel as well as the pitch & roll (up and down) and YAW (sideways) motion of the boat. Compass readings can be displayed electronically thanks to the fluxgate, which also facilitate course corrections in electronic autopilots.
The barometer and air temperature sensors are early indicators of forthcoming weather conditions.

Components

In the box:

- Navsensor
- Flat mount bracket
- Pole mount bracket
- Installation instruction
- Mounting screws (not magnetic)
- Warning Sticker

Functions

The sensor provides following information via NMEA 2000:

- GPS-Position
- Date/Time (UTC)
- Speed over Ground

- Course over Ground
- Elevation
- Heading
- Barometric Pressure
- Air Temperature
- Rate of Turn
- Pitch and Roll

The NMEA Interface

The VDO Navsensor is a NMEA certified sensor. It transmits and receives NMEA 2000 data to an existing NMEA 2000 network
The parameter group numbers (PGN) of the data which the sensor sends are given in the table below. More information about NMEA can be found under www.nmea.org

Receiving PGNs

PGN	Message name
59392	Acknowledgment ISO
60928	Address Claim ISO
126208	Command Group Function
59904	Request ISO
60160	Transport Protocol, Data Transfer ISO
60416	Transport Protocol ISO

AMZ YACHTING

Transmitting PGNs

PGN	Message name
59392	Acknowledgment ISO
60928	Address Claim ISO
65240	Commanded Address ISO
126208	Command Group Function
126464	TX/RX PGN List Group Function
126993	Heartbeat PGN
126996	Product Information
126998	Configuration Information
127250	Vessel Heading
127251	Rate of Turn
127257	Attitude
129025	Position, Rapid Update
129026	COG & SOG, Rapid Update
129029	GNSS Position Data
129033	Local Time Offset
130311	Environmental Parameters
130314	Actual Pressure
130316	Temperature, Extended Range
127258	Temperature (Old Version)

AMZ YACHTING

Installation of the VDO Navsensor

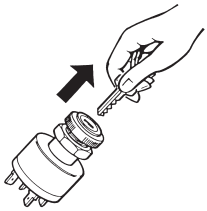

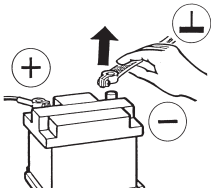

Before beginning, disconnect the negative terminal on the battery, otherwise you risk a short circuit. If the craft is supplied by auxiliary batteries, you must also disconnect the negative terminals on these batteries! Short circuits can cause fires, battery explosions and damages to other electronic systems. Please note that when you disconnect the battery, all volatile electronic memories lose their input values and must be reprogrammed.

Where to install

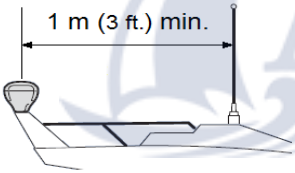

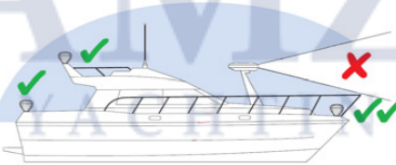

Mount the Navsensor at least 1m away from VHF antennas and clear of radar arrays

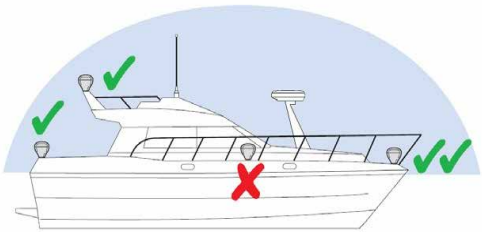

Mount the sensor as midship as possible and with clear sky view
Note: If installed on steel hull vessels, install the sensor as high as possible away from the magnetic steel.

Warning Label

Please place the included warning sticker near the installation location

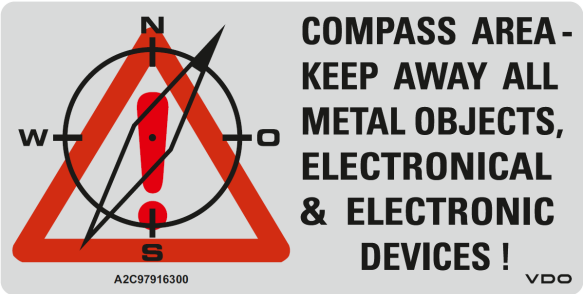

Flat mount installation

Warning

DO NOT attach a Navsensor where it can cause a person to fall down or where a person can accidentally hit it with their foot and cause damage to the device.

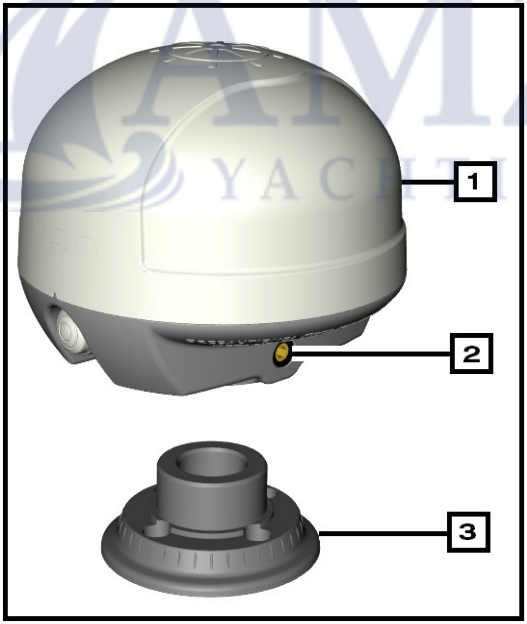

Warning

Always put a grommet in a hole made for cable access.

Use the mounting bracket to give the locations of the four stainless steel non magnetic screws:

1. Put the mounting bracket **(3)** on the vessel where you are to attach it. Make sure that you will not cause damage to other equipment, ropes or electrical cables when you attach the bracket.
2. Use the mounting template to mark the position of the four attachment holes. Examine the location again to make sure that it is a good location, then drill 4 x 3.5 mm holes.

Note: If screws are to attach the bracket to wood, drill 1.5 mm pilot holes and not 3.5 mm clearance holes.

3. Use two screws to temporarily attach the bracket to the vessel.
4. Put a 15 mm dia. drill bit into the centre of the mounting bracket and drill a cable access hole into the vessel. Remove the two attachment screws and bracket. Deburr all holes and clean them fully.
5. Put a 15 x 6 mm grommet on to a NMEA 2000 micro cable (Not supplied). Carefully push the cable through the hole and set the grommet in this hole.
6. Push the NMEA 2000 micro cable through a bracket gasket (if used) and then the bracket. Align the bracket to its attachment holes in the vessel.
7. Use the not magnetic stainless steel screws to attach the bracket to the vessel.

Do not cause damage to the cable or surface of the vessel.

8. Align the keyway in the cable connectors and then push the NMEA cable into the socket in the bottom of the Navsensor **(1)**.
Turn the collar to lock the cable
9. Make sure that the arrow on the bottom of the sensor is aligned with the vessel's keel
10. Put the Nav sensor on to the bracket. Carefully push the cable through the grommet in the access hole while you do this.
11. Tighten the set screw **(2)** (3 mm hex key).
12. Get the free end of the NMEA 2000 micro cable and connect it to a T-junction of a existing NMEA 2000 backbone.

Note: Make sure that you set the cable away from sources of Electrical Magnetic interference. Also make sure that the foot of a person cannot touch the cable and cause injury to the person or cause damage to the cable.

Pole mount installation

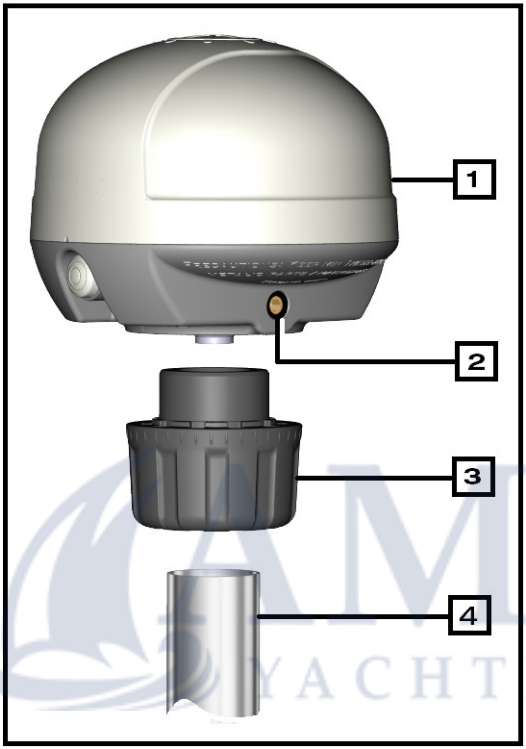

Warning
Always put a grommet in a hole made for cable access.

Attach the Navsensor housing to a pre-installed threaded pole:

1. Turn the mounting collar **(3)** fully on to the pole. Maximum torque to use is 12 Nm. This pole must have an external thread 1-14 UNS-2A.
2. Push the NMEA 2000 micro cable through the mounting collar and pole.

Note: Be careful when you move the cable. Make sure that no sharp edges can cause damage to the cable insulation.

3. Align the keyway in the cable connectors and then push the NMEA cable into the socket in the bottom of the Navsensor **(1)**.
Turn the collar to lock the cable.
4. Carefully push the cable through the mounting pole, put the Navsensor on to the mounting collar and align the arrow on the bottom of the sensor with the vessel's keel
5.Tighten set screw **(2)** (3 mm hex key).

Do not cause damage to the cable or surface of the vessel.

6. Get the free end of the NMEA 2000 micro cable and connect it to a T-junction of a existing NMEA 2000 backbone.

Calibration

The Navsensor comes along with a built in fluxgate compass, able to calibrate itself to the influence of magnetic components of the vessel. Since this interference may change over time, the calibration should be performed from time to time.

The compass calibration routine should be executed:
- after the installation of the NavSensor
- before and after long voyages
- after installation of new electronic components
- after welding work
- at least once a year (at beginning of the season)

The calibration is performed by turning the boat for two full circles. To get the best accuracy please be aware of the following conditions:

AMZ YACHTING

- The circle diameter should have about 4 to 6 times the length of the hull
- The circles should be as round as possible
- The speed of the boat should be around 2-3kn.
- The maneuver should be carried out away from boat traffic, large ships and harbor installations
- The weather conditions should be calm (low wave height and wind speed)

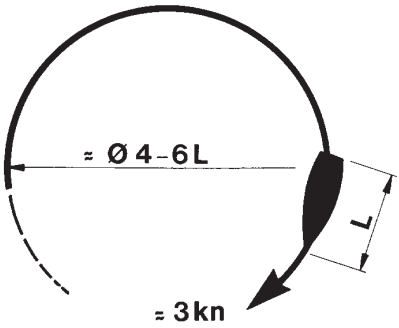

Please execute following steps:

1. Start turning the boat in a clockwise direction and then press the push button on the Navsensor for 5 seconds (the color turns from green to steady red)
2. Continue turning the boat untill the red color of the button goes back to grey (approx. after 1 1/5 circles)
3. Start turning the boat counter clockwise and press the button again for 2 seconds (the color turns back to steady red) any issues please refer to the LED code list below.
4. Continue turning the boat until the steady red color changes.

Setting push button with integrated LED

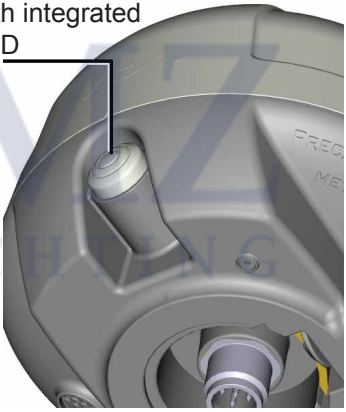

Note: During this process there is no compass reading present!

5. At the end of the second circle the NavSensor analyses the data of both circles. If the result doesn't differ more than 2° the new compensa tion values will be used and the compass is calibrated successfully. In this case the color changes to green (steady or flashing)

AMZ YACHTING

If the data differs by more than 3° the new reading will not be used. In this case the color turns to red (flashing). Please repower the sensor and re-do the calibration.
An unsuccessful calibration can be caused by:
- Bad weather conditions (too high waves and/or strong wind)
- Not the right speed or circle distance performed
- Moving magnetic components close to the sensor
- Electronic equipment close to the sensor
- Inproper positioning of the sensor

Note: Red flashing can also be caused by a different internal failure of the NavSensor. Please refer to chapter “Diagnostic Indication”

Note: After the first successful installation and calibration general aligment of the Navsensor in respect to the fore and aft line of the boat should be checked. This is done by performing several plottings to different landmarks (please take magnetic variation into account as well). If there is a deviation in the alignment, the sensor should be turned on its bracket accordingly (if so, an additional sensor calibration has to be performed afterwards).

AMZ YACHTING

Diagnostic Indication

LED color	LED Status	Comment
Green	steady lit	Everything is working ok
Green	1 Hz flashing	Compass is working ok; GPS has no satellite reception
Red	steady lit	Compass calibration circle is performed
Off		Compass calibration first circle is completed or power fail
Red/Green	1 Hz flashing	Supply voltage too low (below 9V)
Red	1 Hz flashing	Possible root causes:
		External failures: - Over voltage (above 30V) - NMEA 2000 network problems (e.g. missing terminator)
		Internal failures: - Memory lost - GPS sensor communication failed - Compass electronic failure - Acceleration or gyro sensor communication failed - Barometer module communication failed
		Other failures: - Compass calibration failed (not accurate)

AMZ YACHTING

Hardware Specification

Sensor

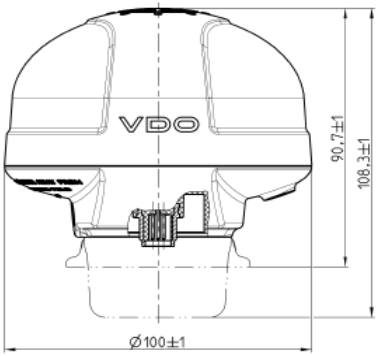

Brackets

Flat Mount:

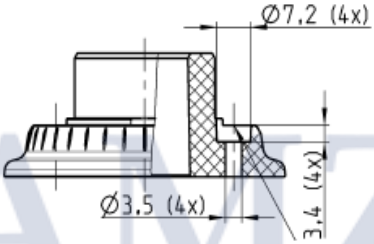

Pole Mount:

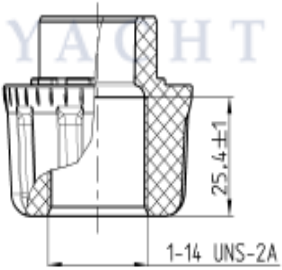

Pinout

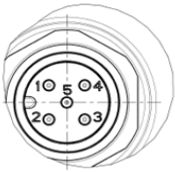

Pin	Signal
1	Shield
2	NET-S (V+)
3	NET-C (V-)
4	NET-H (CAN H)
5	NET-L (CAN L)

AMZ YACHTING

Technical Data

Housing Material	Mounting/Housing: Plastic (PBT-ASA-GF30FR) Top: Plastic (ASA)
Dimensions	WxH: 100 x 108.3 mm
In-/Outputs	See “In-/Output Table” below
Unit weight	250g
Operating temperature	-20° / +70°
Storage temperature	-30° / +80°
Operating voltage range	8 – 16 VDC
Current consumption	~50mA
GPS channels	66 channels (22 Tracking, 66 Acquisition)
GPS datum	WGS-84 (default)
GPS-time to first fix	Cold (open sky): 33s (typical) Warm (open sky): 1s (typical)
GPS frequency range	1575.42MHz ± 1.023MHz
GPS position accuracy	Autonomous: 3m (2D RMS)
GPS max. altitude	< 50,000 m
GPS max. velocity	< 515 m/s
Air temperature range	-20° / +65°C
Air temperature accuracy	+/-1°C
Air temperature adaption time	30s
Barometer resolution	1hPa
Yaw resolution	1°/s
Yaw range	+/- 100°/s
Yaw zero error	+/- 0.7°/s
Calculated heeling resolution	1°
Calculated heeling, pitch & roll-range	+ / -50°
Compass resolution	0.5°
Compass accuracy	>10uT
Compass field strength	min 8 – 80 uT
Compass tilt angle	+ / - 40°
Compass auto calibration	by 2 circles (opposite directions)

AMZ YACHTING

Nominal Position	NL 0; According to DIN 16257
Mounting/Fixing	Top or pole mount; Thread: 1-14 UNS-2B
Protection Class	IP 65 According to IEC 60529:2001; in nominal position
Flammability Housing	UL-94 V0
EMC	DIN-EN 61000-6-2:2006 IEC 60945:2002 DIN-EN 61000-6-3:2011
Reverse Polarity Protection	Yes, 1 minute
Short Circuit Protection	Yes, 1 minute
NMEA manufacture code	443
NMEA product code	8600
Approval	CE, NMEA 2000 V2.0
VDO product number (packed)	A2C59501981
VDO product number (unpacked)	A2C96792000

AMZ YACHTING

Accessories

Part Number	Item specifics
A2C38293800	Mount Navsensor Flat
A2C97838800	Mount Navsensor threaded
A2C96243700	NMEA 2000 Cable 0.5m
A2C96243800	NMEA 2000 Cable 2m
A2C96244000	NMEA 2000 Cable 6m
A2C96244200	NMEA 2000 Cable 10m
A2C38804100	NMEA 2000 Cable 30m
A2C39308500	NMEA 2000 Infield Installation Connector Female
A2C39310500	NMEA 2000 Infield Installation Connector Male
A2C39312700	T Splitter NMEA 2000
A2C39310600	NMEA 2000 Terminator Female
A2C39311000	NMEA 2000 Terminator Male
A2C39312500	NMEA 2000 Inline Terminator
A2C39312900	NMEA 2000 Power cable

AMZ YACHTING

Continental Automotive Switzerland AG
Industriestrasse 18
9464 Rüthi
Switzerland

AMZ YACHTING

www.marine.vdo.com
VDO – A Trademark of the Continental Corporation

The information provided in this brochure contains only general descriptions or performance characteristics, which do not always apply as described in case of actual use or which may change as a result of further development of the products. This information is merely a technical description of the product. It is not meant or intended to be a special guarantee for a particular quality or particular durability. An obligation to provide the respective characteristics shall only exist if expressly agreed in the terms of contract. We reserve the right to make changes in availability as well as technical changes without prior notice.
A2C99834500 I Continental Automotive Switzerland AG I English © 2016